+48 697 530 240
+48 61 876 89 46
info@rexelpoland.com

□□□□□□□ R750

□□□R1000 / R750□□□□□□□□□□□□□□□□□□□□□

□□□□□

-□□□□□□□□□□□□□□□□□□□

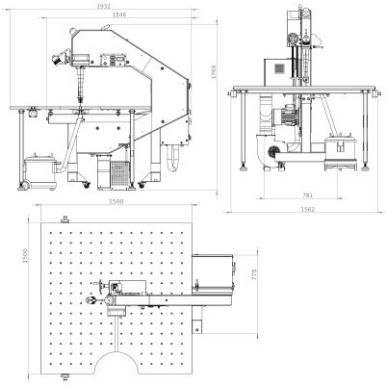

LED

DANGER
MAX.
4 mm
(5/32")