+48 697 530 240
+48 61 876 89 46
info@rexelpoland.com

Scan the code

ULTRASONIC CUT-TO-LENGTH MACHINE CTL-2000 UM K3 – 0036

Cut to length machine - is a device used to cut materials, both fabric knitted and nonwoven, with a roll width of up to 2000mm and a length up to 50m. The diameter of the material roll cannot exceed 1000mm. The machine consists of two parts. The unwinding part consists of two non-driven expanding shafts, supported on the bearing pins, mounted inside the steel frame. The working part consists of a wooden table top, covered with a laminate. The drive roller is located in the upper part of the machine, under the table top and the pressure roller is lifted pneumatically. The set of these two rollers is the actual drive for the unwinding and moving the material. Right behind the drive rollers there is a clamp, also lifted pneumatically. While the material is being fed, the clamp is lifted is being pressed down after stopping the drive rollers, just before the machine starts the cut cycle. The cut piece is placed on the transverse swing beam (hanger). Hanging of the materials can be done "alternately" (every other cut piece is flipped). Or one can switch the machine to hang each piece on the same side.
Specifications:
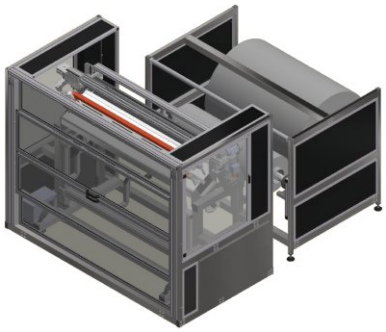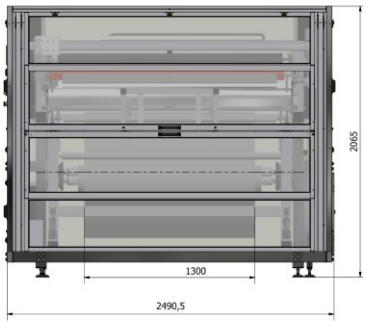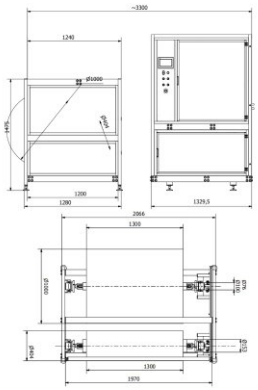
- Working pressure: 6 atm
- Max. material width: 2000 mm
- Max. material diameter: 1000 mm
- Max. material weight: 120 kg
- Voltage: 230 V
- Weight: 560 kg